Brass Vacuum Tanker Gate Valve

RTV 30

Brass Body, with **NBR** O-rings, **AGRI Standard** Square Flanged, Piston Type, Large Capacity

Pressure / Temperature Specifications	
Pressure	4 Bar
Temperature	-20°C to 90°C

Material Specifications	
1. Body	Brass CB 754 S
2. Wedge	Brass CB 754 S
3. Cap	Brass CB 754 S
4. Gasket	Fibre
5. Stem	Brass CW 614 N
6. Screw	Stainless Steel AISI 304
7. Tow Packing	Fibre
8. Stuffing Box	Brass CW 614 N
9. Fork	Brass CW 617 N
10. O-ring	NBR

Dimensions	
Size	6″
Ø	143
H	490
h	390
S	116
L	180
F	13
A	150
Kg	11.14

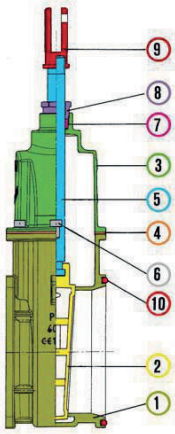

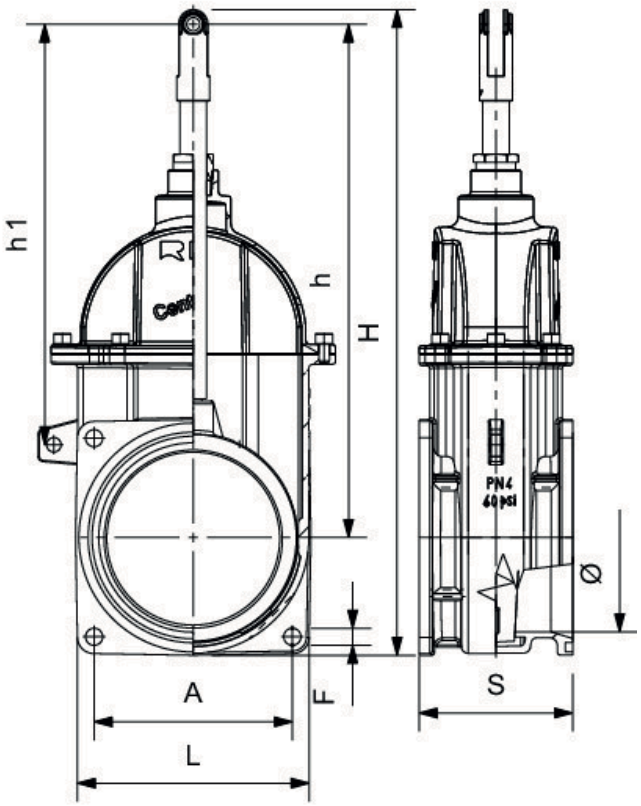

Last updated 20/12/2016