Carbon Steel Ball Valve - Flanged ANSI 150 - ISO Top

ATEX FIRESAFE

LV 8637

ISO 5211 for Direct Mount, Flanged **ANSI 150 RF**, 2 Piece WCB Carbon Steel Body, Full Bore, CF8 Stainless Steel Ball, 304 Stainless Steel Stem, **TFM 1600** Seats, Graphite Packing, Firesafe to **API 607 & TA-LUFT Approved**

Pressure / Temperature Specifications	
Pressure	CL150
Temperature	-10°C to 180°C

Material Specifications		
1	Body	WCB Carbon Steel
2	Cap	WCB Carbon Steel
3	Ball	CF8 Stainless Steel
4	Seat	TFM1600
5	Joint Gasket	Graphite
6	Stem	AISI 316 Stainless Steel
7	Thrust Washer	PTFE
8	O-ring	Viton
9	Stem Packing	Graphite
10	Stem Ring	AISI 304 Stainless Steel
11	Belleville Washer	AISI 304 Stainless Steel
12	Stem Nut	AISI 304 Stainless Steel
13	Handle	AISI 430 Stainless Steel
14	Nut	AISI 304 Stainless Steel
15	Stud Bolt	AISI 304 Stainless Steel
16	Nut	AISI 304 Stainless Steel
17	Stud Bolt	AISI 304 Stainless Steel
18	Stopper Pin	AISI 304 Stainless Steel
19	Lock Washer	AISI 304 Stainless Steel

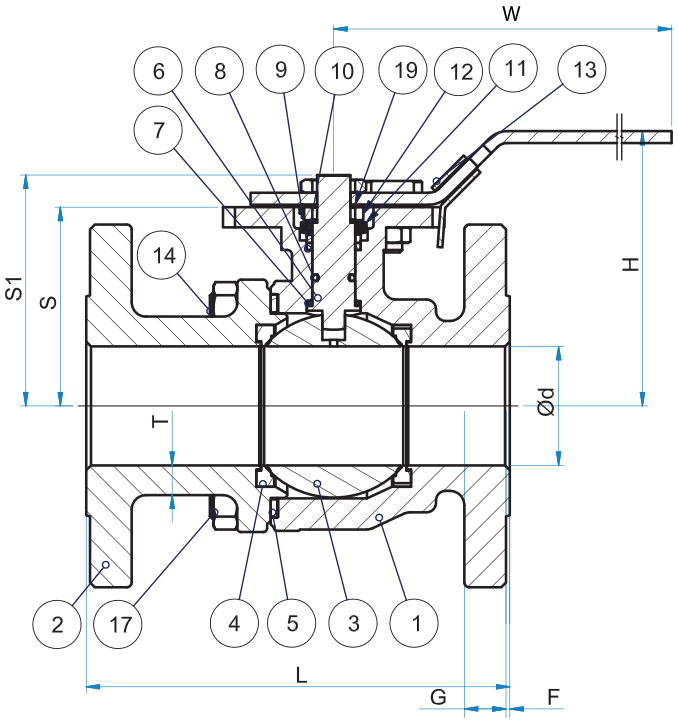

Valve Dimensions										
Size	**D**	**F**	**G**	**L**	**W**	**H**	**S**	**S1**	**T**	**Kg**
½"	15	1.6	9.6	108	165	87.4	46.5	53.5	3.3	2.2
¾"	20	1.6	11.2	117	162	91.4	51.5	59.5	3.7	2.2
1"	25	1.6	12.7	127	162	98.4	57.5	68.3	3.9	3.9
1½"	40	1.6	15.9	165	203	108.4	76.5	90	4.9	6.3
2"	50	1.6	17.5	178	203	110.8	83.5	92.3	5.5	9.5
2½"	65	1.6	20.8	190	323	154.4	118.5	121.2	5.8	14.9
3"	80	1.6	22.3	203	323	180	129.5	129.5	6.1	17.9
4"	100	1.6	22.3	230	323	194.2	145	145	6.5	28.3
6"	150	1.6	23.9	394	415	240	175	221.3	7.1	64.0

Torque Figures (Nm)									
Size	**½"**	**¾"**	**1"**	**1½"**	**2"**	**2½"**	**3"**	**4"**	**6"**
Torque	5.0	8.0	10.5	20.5	31.0	37.0	62.0	97.0	210.0

Continues on Page 2

Carbon Steel Ball Valve - Flanged ANSI 150 - ISO Top

LV 8637

Topworks Dimensions					
Size	**A**	**B**	**M1**	**M2**	**Q**
½"	42	50	R3	R3.5	9
¾"	50	70	R3.8	R4.8	9
1"	50	70	R3.8	R4.8	11
1½"	70	102	R9.6	R11.2	14
2"	70	102	R9.6	R11.2	14
2½"	102	125	R6.5	R7.15	17
3"	102	125	R5.6	R7.15	17
4"	102	125	R5.6	R7.15	22
6"	102	125	R6	R7	27

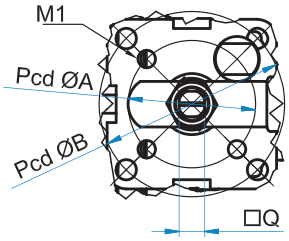

½" to 2"

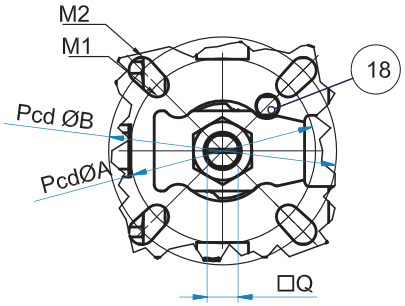

2½" to 8"

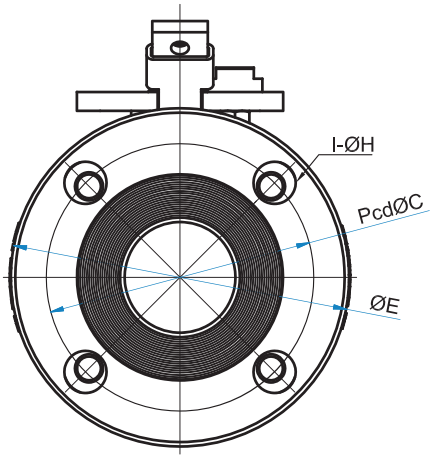

Flange Dimensions			
Size	**C**	**E**	**I-H**
½"	60.5	89	4 - 16
¾"	70	96	4 - 16
1"	79.5	108	4 - 16
1½"	98.5	127	4 - 16
2"	120.5	152.4	4 - 19
2½"	139.5	178	4 - 19
3"	152.5	190.5	4 - 19
4"	190.5	229	8 - 19
6"	241.3	280	8 - 22.5
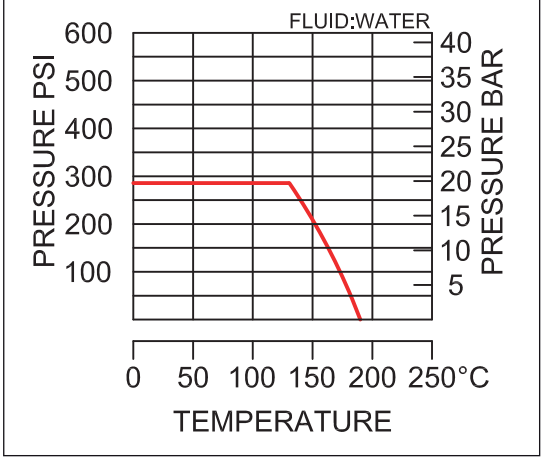
Pressure/Temperature Chart